A x1	D x4	H x2	K x11 1/4X20mm	N x23
B x1 C x1	E x1	I x4	L x4 1/4X60mm	O x23
	F x2	J x23	M x8 M8X40mm	P x1
	G x2			

1

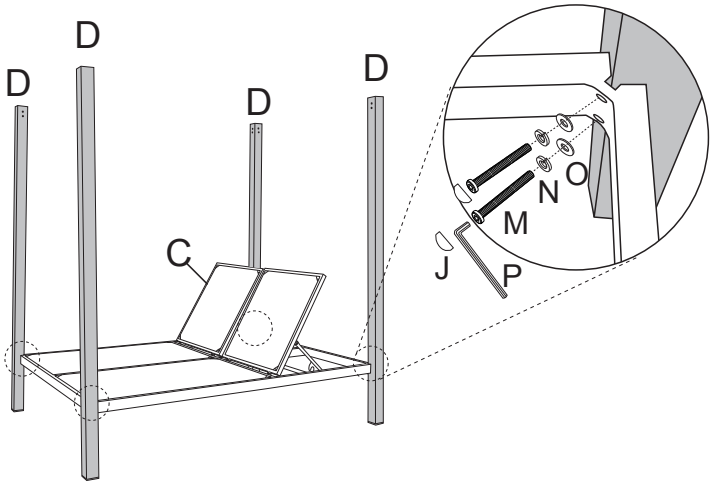

2

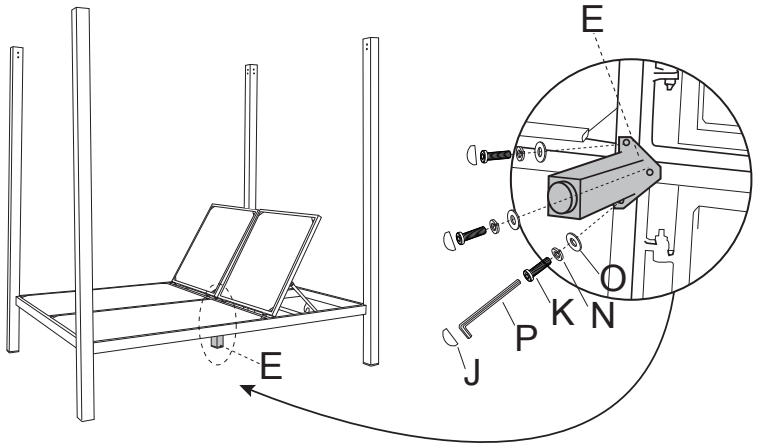

3

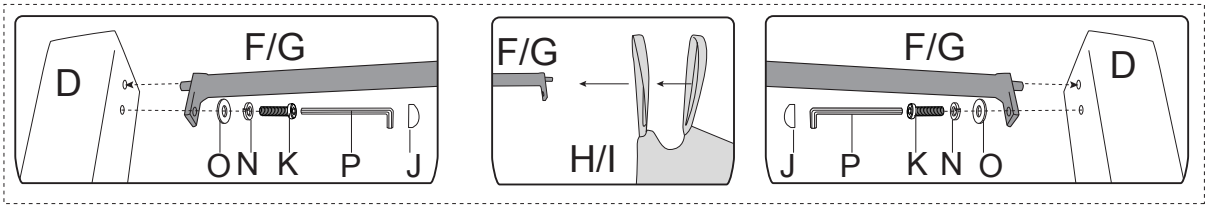

x8

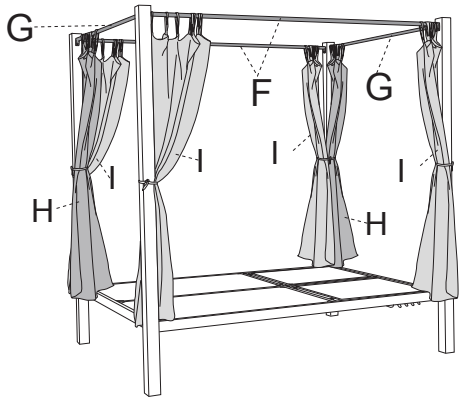

4

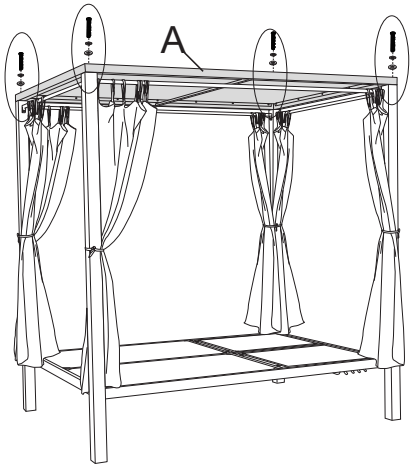

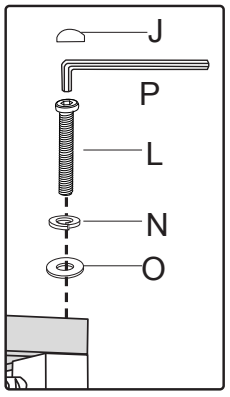

5